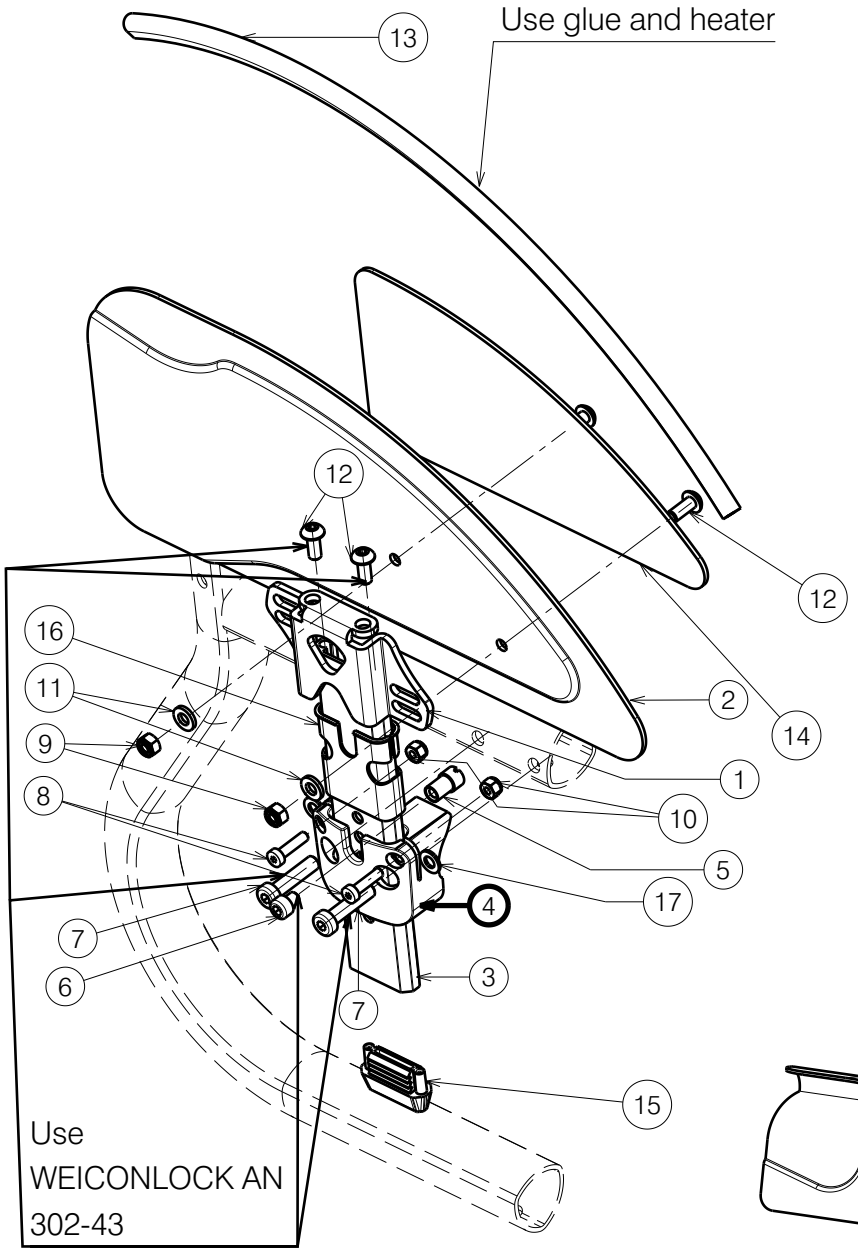

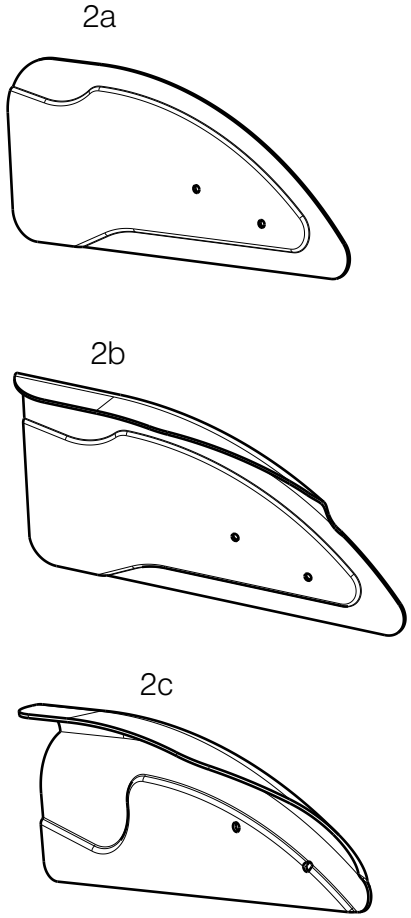

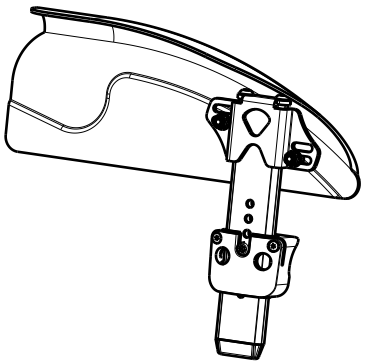

Material			
No.	Plan	Article	Quantity
1	YP08854(R)	2642254	1
	YP08855(L)	2642354	1
2a	YP07450(R)	27639...	1
	YP07451(L)	27640...	1
2b	YP07174(R)	27598...	1
	YP07175(L)	27599 ...	1
2c	YP08874(R)	26550..	1
	YP08884(L)	26551..	1
3	XP02068	GP15099	1
| 4	XP03335	GP27426	1
5	XP01730	GP11200	1
6	M5X6DIN912	1997822	2
7	M6x25	2994897	2
8	M4x16	2994070	2
9	NutM5black	2994006	2
10	NutM4	1001678	2
11	M5DIN125A	2994069	2
12	M5x12	2994074	4
13	---	1003299	0,8m
14	XP02272(R)	2996465	1
	XP02273(L)	2996466	1
15	XP03080	2996656	1
16	XP03091	2996662	1
17	M5DIN125	2996010	2

Degrease the screws before using the glue.

For assembling use document S-PL.40.06

| REMOVABLE SIDE GUARD NOT POSSIBLE WITH CAMBER 6

REMOVABLE SIDE GUARD TRIGO 30- 36				Plan No.
				EP00360/ K
Scale:1:3	Drafted	Verified	Confirmed	
Date	13/11/2018	22/09/2025	22/09/2025	
Initials	AS	AZ	TK	

EP00360 /K